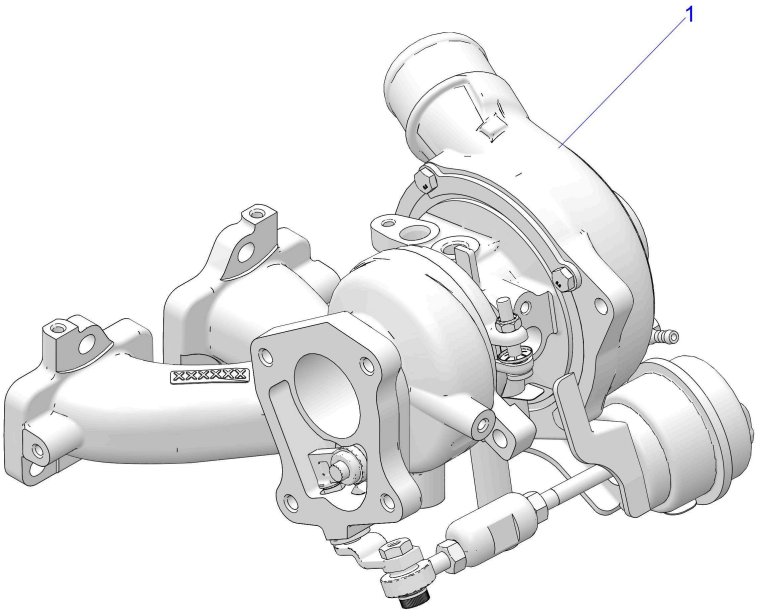

© 2021 Polaris Industries Inc.

C1208818

Reference #	Part#	Description	Quantity
	2205929	K-ACTUATOR [NOT ILLUSTRATED]	1
	2205930	K-ACTUATOR HARDWARE [NOT ILLUSTRATED]	1
	2205932	K-BANJO,BOOST,REF [NOT ILLUSTRATED]	1
	2209080	K-GASKET [NOT ILLUSTRATED]	1
1	1208928	ASM-TURBO-R,COMPLETE [INCL. ALL]	1

Copyright 1996-2026 Polaris Industries U.S.A All rights reserved.